AMERICAN ENGINEERING
An EFI Company

Machine Safety
OSHA Compliance
Physical & Electronic
Machine Guarding

Product Catalog 2026

americanengg.com

ABOUT US

Health & Safety culture

With over 30 years of experience, we are an independent firm of designers, engineers, and technical specialists working across all aspects of today's-built environment. Together, we help our clients tackle their most complex challenges—transforming innovative ideas into tangible, profitable, and sustainable realities as we continuously strive to find better solutions and shape a better world.

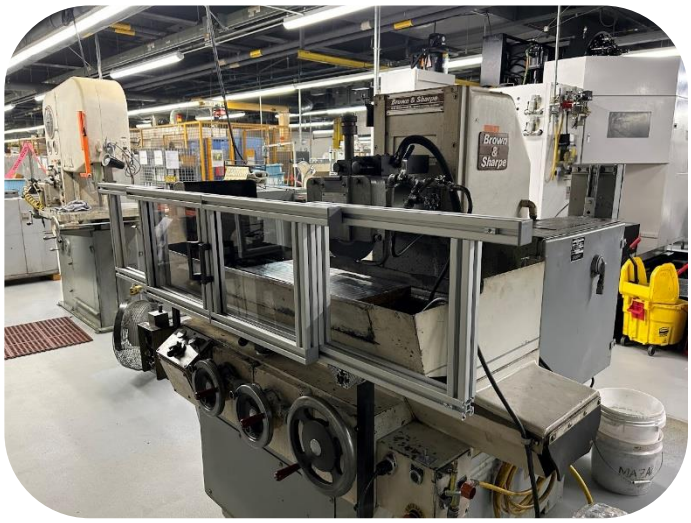

Industries We Serve

We believe that knowledge is priceless. That's why our experienced team across all disciplines accompanied with site experience, providing a fully in-depth knowledge throughout all phases of project.

Team experience across industries:

- ✓ Manufacturing
- ✓ Industrial machinery
- ✓ Institutional
- ✓ Aerospace
- ✓ Healthcare
- ✓ Military

Environmental, Health & Safety Cardinal Rules

At American Engineering, Safety Cardinal Rules are mandatory, "life-saving" rules that are deemed to be safety-critical and for which there will be zero tolerance for violation.

For more details or to order online please visit our website
americanengg.com

AMERICAN ENGINEERING
An EFI Company

Custom Engineered Solutions

Safety does not have to mean a loss of productivity. Over 30 years of machine experience means we have the knowledge to engineer custom automated solutions to meet your guarding challenges, while enhancing your productivity at same time. See just a few samples of our custom safety solutions…

Hydraulic Insertion Press cage; interlocked doors with dual pressure system

Guard developed for Hardinge lathe

Surface grinder with pneumatic wheel to cover when the automatic gate door is opened. All controls are done through a touch screen & PLC programming

For more details or to order online please visit our website
americanengg.com

AMERICAN ENGINEERING
An EFI Company

Table of Contents

Lathe Guards 7

1.0 Chuck Guards 7

1.0.1 Model TF – Round screen 7

1.0.2 Model VT – Laminated glass 8

1.0.3 Model TFM – Full metal guard 8

1.0.4 Model IE – Flat screen 9

1.0.5 Model MINOR – Sliding guard 10

1.0.6 Model MAJOR – Sliding guard 10

1.0.7 Model TP – All metal hinge guard 11

1.0.8 Model LA – All metal single side hinged 11

1.0.9 Model PT – Lift-up chuck guard 12

1.0.10 Model FER-HL – Hardinge lathes 13

1.0.11 Model FER-HL-CC – Collet Closer Guard 13

1.1 Lead Screw Covers 14

1.1.1 Model AR – Lead screw covers 14

1.1.2 Model AR-DB – For large lathes 14

1.1.3 Model IR-COIL-24 – Metal coil covers 15

1.2 Lathe Carriage Chip Shields 15

1.2.1 Model TC – Chip shield rear mount 15

1.2.2 Model TC – Front mounting 16

1.2.3 Model SPIK – Magnetic based flat shield 16

1.3 Model FER-SD – Multiple Sliding Screens 17

1.4 Model TGS & FER-LRV - Vertical Lathe Guards (VTL) 18

1.5 Lathe Accessories 19

1.5.1 Model BSW – Back splash wall 19

1.5.2 Model FER-PED – Stop pedal for long lathe 19

1.5.3 Model SPIDER – Belt Sanders for lathes 20

Milling Machines Safety Guards **21**

2.0 Model FB – 2 axes of rotation **21**

2.1 Model FBB – 3 axes with lifting **21**

2.2 Model FA – 2 axes, more adjustments **22**

2.3 Model FAB – 3 axes with lifting **22**

2.4 The screen sizes & options **23**

2.4.1 Half-round screen 23

2.4.2 Flat screens 23

2.5 Model AL - Boring mill guard **24**

2.6 Model FAO – Drawbar guard **24**

Drill Press and Radial Drill Guards **25**

3.0 Models TR-1 & TR-6 – Small drills **25**

3.1 Model TR-5 ..... **26**

3.2 Model TR-2 ..... **26**

3.3 Model TR-2-T **27**

3.4 Model TR-7 – Extended stroke **27**

3.5 Model TR-3A – Geared head or large drills **28**

3.6 Model TR-9 – Lift-up screen **28**

3.7 Model TR-3B – Radial drill guard **29**

Grinder guards and shields **30**

Bench and pedestal grinders **30**

4.0 Models MO-1 & MO-2 – Single Screen 30

4.1 Model MO-2-L-VT-CM – with glass & interlock, double screens 31

Surface Grinder Guards **31**

4.2 Model FER-TA – table mount with sliding doors 31

Cylindrical OD Grinder Guards **32**

4.3 Model PR-1 - Single door system 32

4.4 Model PR-2 – Dual doors system 32

Belt and Disc Sander Guards **33**

5.0 Model FER-DS – For disc sanders **33**

5.1 Model FER-BS – For belt sanders **33**

Band Saw Guards 34
6.0 Model PS-1 - Horizontal band saw 34
6.1 Models TR-1 & TR-6 - Vertical band saw 34
Ironworker P50 & P90 Safety Guards 35
7.0 Models IR-P50 & IR-P90 - Piranha ironworkers 35
Hydraulic and Break Press Guarding 36
8.0 Model FER-HYD – For H-Frame insertion presses 36
8.1 Model FER-DSP – Break press laser system 36
Punch Press Guarding 37
9.0 Model PP – Punch Press 37
Light Curtains, Scanners & Safety Mats 37
10.0 Light Curtains Systems 37
10.1 Safety Mats – Pressure sensitive flooring 37
Anti-Restart and Electrical Components 38
11.0 Anti-Restart Devices - Motor controls 38
LED Work Lamps for machines 39
12.0 Model IR-LED-COB – Adjustable arm work light 39

For more details or to order online please visit our website
americanengg.com

Lathe Guards

1.0 Chuck Guards

The chuck area is by far the most dangerous area on a lathe. We have various sizes and designs to satisfy the operator and ensure compliance to regulations.

1.0.1 Model TF – Round screen

The machinist choice!

The TF chuck guard is made of a robust steel structure and a polycarbonate screen. The screen can be easily replaced, making this product durable and convenient to operators.

The arm assembly has a positive action interlock switch built-in the housing.

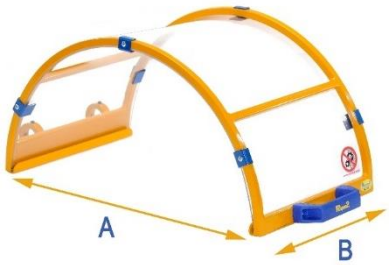

Fits chuck diameter up to 17”

For larger chucks, see our **Minor** & **Major** models

Available Screen Sizes (special sizes available on request)								
P/N	**TF-300**	**TF-350**	**TF-400**	**TF-450**	**TF-500**	**TF-550**	**TF-600**	**TF-650**
A (diameter)	**300 (11 3/4”)**	**350 (13 3/4”)**	**400 (15 3/4”)**	**450 (17 3/4”)**	**500 (19 1/2”)**	**550 (21 1/2”)**	**600 (23 1/2”)**	**650 (24 1/2”)**
B (width)	**180 (7”) or 240 (9.5”)**							

Ordering guide: for A=300mm screen diameter & B=240mm wide: **TF-300H240**

To find the right size for your chuck, measure the diameter of the largest chuck on your lathe. Then multiply by 1.5 (and convert into mm, if in inches). Round up to the nearest diameter (A). Ex.: chuck dia=10in, so 10inx1.5x25.4mm/in=381=400mm screen (A).

The guards offered in this section have the same features as the model TF but are mostly made of heavy-duty steel. Available with laminated glass for longer life!

1.0.2 Model VT – Laminated glass

The arm assembly has a positive action interlock switch built-in the housing. This version is also available with polycarbonate screen, model **POL**

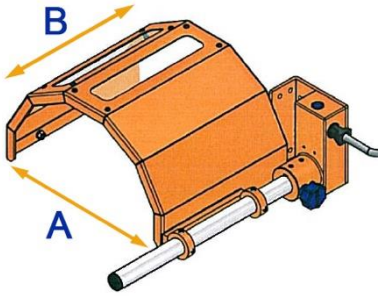

Available screen sizes (special sizes available on request)						
P/N	**VT or POL**					
	300	**350**	**400**	**450**	**500**	**600**
A (diameter)	**300 (11 3/4”)**	**350 (13 3/4”)**	**400 (15 3/4”)**	**450 (17 3/4”)**	**500 (19 1/2”)**	**600 (23 1/2”)**
B (width)	**Standard 240mm (9.5”)** / Option 180mm (7”)					

1.0.3 Model TFM – Full metal guard

This model TFM can resist all type of chemicals, a heavy usage, tough working conditions and requires no maintenance at all! Includes interlock switch.

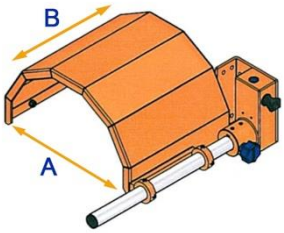

Heavy duty steel, only 5 Kg

Available Screen Sizes (special sizes available on request)						
P/N	**TFM**					
	300	**350**	**400**	**450**	**500**	**600**
A (diameter)	**300 (11 3/4”)**	**350 (13 3/4”)**	**400 (15 3/4”)**	**450 (17 3/4”)**	**500 (19 1/2”)**	**600 (23 1/2”)**
B (width)	**Standard 240mm (9.5”) – Option 180mm (7”)**					

1.0.4 Model IE – Flat screen

The IE guard is offered in 2 different sizes. The screen can be ordered in polycarbonate, just add **-POL** to the part number or in laminated glass, then add **-VT** to the p/n.

Special sizes available on request.

P/N	IE-A	IE-B
A	**280 (11”)**	**390 (15$^{1/4}$”)**
B	**300 (12”)**	**390 (15$^{1/4}$”)**
C	**260 (10$^{1/4}$”)**	**310 (12$^{1/4}$”)**

Did you know?

The arms of all our small chuck guards are equipped with a built-in interlock switch. It’s fully enclosed in a metal box to protect from dust, water, coolants and some genius workers trying to bypass the safety switch!

Mechanically, the guard can be easily installed. Care must be taken to install the guard in such a way that the chuck jaws do not interfere with the guard.

Electrically, the installation needs to be performed by a qualified technician. Wiring diagram of the switch is available. Give us a call anytime if you need assistance!

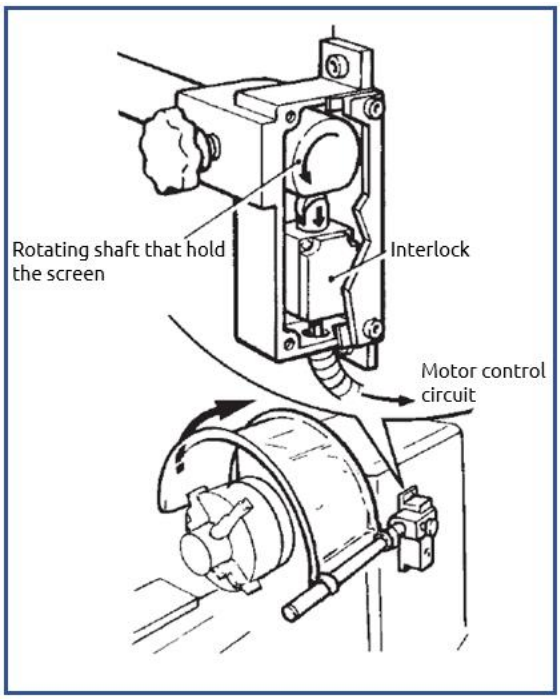

Our **Minor** & **Major** sliding guards are for larger chucks. The heavy-duty industrial linear bearings can be used in harsh environment without maintenance.

The guard is mounted on the headstock using the included mounting feet, and are completely adjustable. Interlock switch is included.

1.0.5 Model MINOR – Sliding guard

Door width is 520mm (21”).

MINOR	A (chuck dia)	B	C
AER	400 (16”)	495 ($19^{1/2}$")	350 ($13^{3/4}$”)
SPECIAL	500 (20”)	600 ($23^{5/8}$”)	450 ($17^{3/4}$”)
Special configurations & sizes available on request			

Options: laminated glass & LED lights

1.0.6 Model MAJOR – Sliding guard

MAJOR	A (chuck dia)	B	C
ST-700	600 (24”)	765 ($30^{1/8}$”)	505 ($19^{7/8}$”)
ST-800	700 (28”)	870 ($34^{1/4}$”)	560 ($22^{1/16}$”)
ST-1000	900 (36”)	970 ($38^{1/8}$”)	655 ($25^{3/4}$”)
ST-1200	1100 (44”)	1125 ($44^{1/4}$")	760 ($29^{15/16}$”)
ST-1500	1400 (56”)	1265 ($49^{3/4}$”)	910 ($35^{13/16}$”)
Special configurations & sizes available on request			

Door width is 400mm (16”)

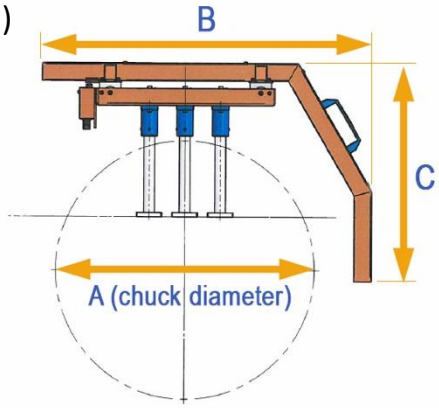

1.0.7 Model TP – All metal hinge guard

P/N	A (chuck dia)	B	C
TP-700	600 (24”)	883 (35”)	472 (19”)
TP-800	700 (28”)	983 (39”)	472 (19”)
TP-1000	900 (36”)	1183 (47”)	572 (23”)
TP-1200	1100 (44”)	1383 (55”)	672 (27”)
TP-1500	1400 (56”)	1583 (63”)	772 (31”)
Special configurations & sizes available on request			

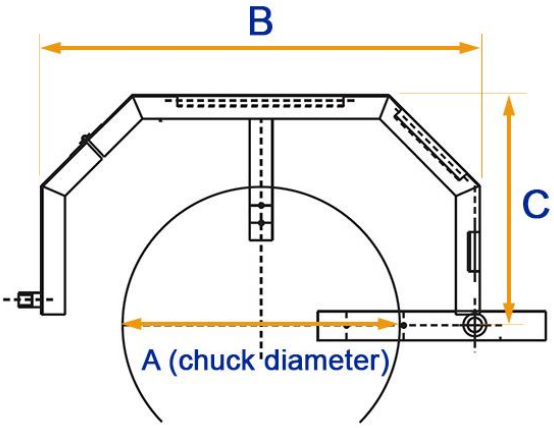

The **TP** guard features a heavy-duty steel frame with a double hinge for tilting. The hinge door is complete with a positive action interlock switch.

Width of the guard is 400 mm ($16^{3/16}$”).

1.0.8 Model LA – All metal single side hinged

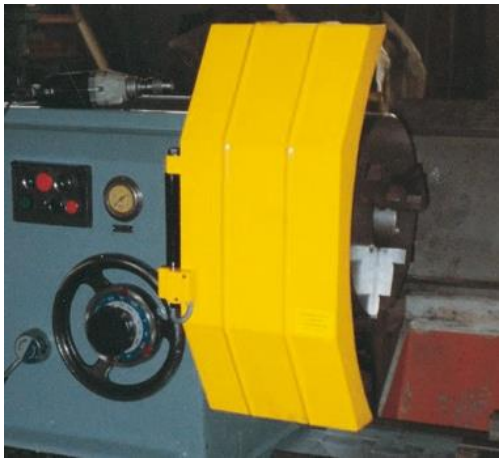

The LA guard is made upon customer measurements. The guard is made of a single hinge door, all metal, with a positive action interlock switch. This guard offers a great protection without compromising the operation.

These guards can be paired to protect the front and back sides of the part to be safeguarded

P/N	Dimensions
LA	Sizes on request

1.0.9 Model PT – Lift-up chuck guard

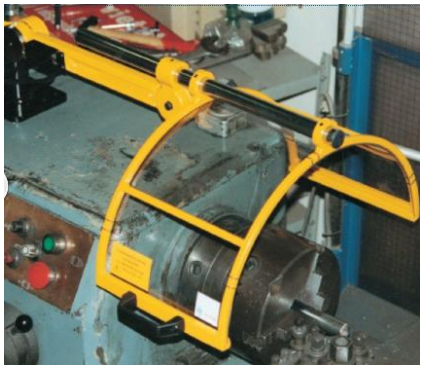

The PT guard uses a similar screen as the TF guard (section **1.0.1**). The mounting arm includes an interlock switch, can rotate and be lifted-up and down from the lathe headstock.

Available Screen Sizes (special sizes available on request)						
P/N	PT-300	PT-350	PT-400	PT-450	PT-500	PT-600
A (diameter)	300 (11 3/4”)	350 (13 3/4”)	400 (15 3/4”)	450 (17 3/4”)	500 (19 1/2”)	600 (23 1/2”)
B (width)	240 (9.5”)					

1.0.10 Model FER-HL – Hardinge lathes

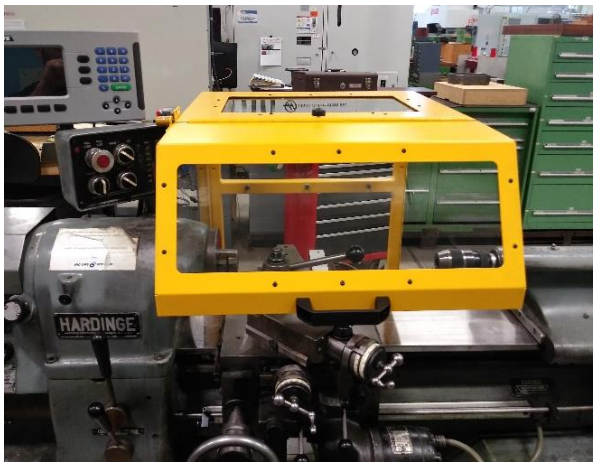

Special guard developed for small lathes such as Hardinge. It covers the chuck area and protects from chips. The guard has options to choose from laminated safety glass and LED work lights.

The mounting brackets are fully adjustable up/down & back/front. The front part of the guard can be lifted and has an interlock switch.

See more details and dimensions on our website.

1.0.11 Model FER-HL-CC – Collet Closer Guard

Special guard developed for Hardinge lathes. It covers the collet closer area and protects from rotating parts. Comes with built-in interlock switch (encoded magnetic).

1.1 Lead Screw Covers

To protect the lead or feed screws, our rolling mechanism is fully enclosed in a heavy-duty metal box thus avoiding pinch points. The fabric is made of Kevlar fibers. The fabric can resist heat from hot chips, chemicals from the coolant and is very hard to rip apart.

1.1.1 Model AR – Lead screw covers

Comes in a kit of 2 boxes, left and right sides of the carriage. Custom made brackets may be needed.

P/N	Length	Width
AR-1000H150	1000 (39”)	150 (6”)
AR-1500H150	1500 (59”)	150 (6”)
AR-2000H200	2000 (78”)	200 (8”)
AR-3000H250	3000 (118”)	250 (10”)
AR-4000H250	4000 (157”)	250 (10”)
AR-5000H250	5000 (196”)	250 (10”)
AR-6000H350	6000 (236”)	350 (13.5”)
Special sizes available on request		

Installation can be done using aluminum profiles (angles), no need to remove the existing screws!

1.1.2 Model AR-DB – For large lathes

Lead screw covers for large lathes. To keep the spring load through the full travel, we have developed the double boxes for screws longer than 23 feet.

P/N	Length	Width
AR-7000H300DB	7000 (275”)	300 (12”)
AR-8000H300DB	8000 (314”)	300 (12”)
Special sizes available on request		

1.1.3 Model IR-COIL-24 – Metal coil covers

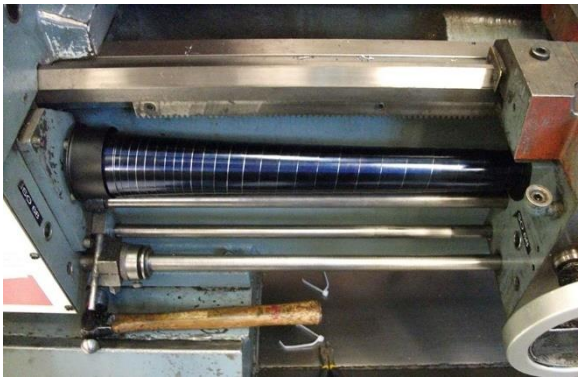

These lead screw covers are designed for small lathes (like Hardinge), for screws up to 610mm (24”) length. Made of tempered steel, with telescopic coil spring for precise fit. Screw removal is required for installation. Includes a pair of coils with 4 mounting brackets.

1.2 Lathe Carriage Chip Shields

We have many options on these chip shields and guards for lathe carriage: laminated glass screens, integrated LED Lights and front or rear mountings. To order the TC guard without the interlock switch, just replace the **–CM** by **–S** in the table below.

1.2.1 Model TC – Chip shield rear mount

These chip guards are mounted at the back of the carriage. It can be lifted and pushed away for setup. Available with powerful LED work lights and laminated glass as options.

The machinist choice!

P/N	TC-1-CM	TC-2-CM	TC-3-CM
A	400 (16”)	570 (23”)	660 (26”)
B	200 (8”)	260 (10”)	360 (14”)
C	140 (6”)	200 (8”)	300 (12”)
D	315 (13”)	365 (15”)	350 (14”)
F	300 (12”)	350 (14”)	450 (18”)
H	600 (24”)	600 (24”)	700 (28”)

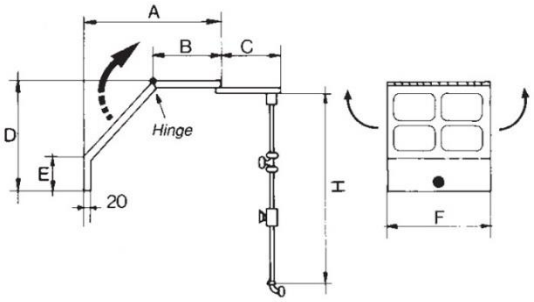

1.2.2 Model TC – Front mounting

All front mount on the carriage, no switch. Usually used on larger lathes.

P/N	TC-4	TC-5	TC-6
A	315 (13”)	365 (15”)	350 (14”)
B	150 (6”)	150 (6”)	150 (6”)
C	350 (14”)	460 (18”)	450 (18”)
F (width)	300 (12”)	350 (14”)	450 (18”)

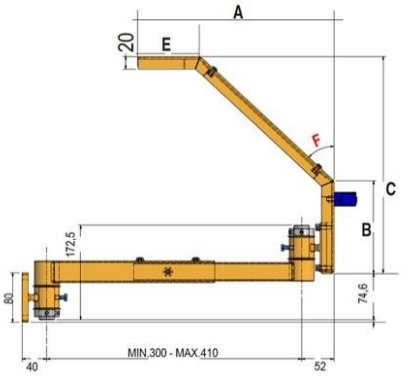

1.2.3 Model SPIK – Magnetic based flat shield

Our new **SPIK** chip shield has a magnetic base with an ON/OFF switch. The magnetic base can pull up to 130 lbs! It comes with an adjustable clear flat screen with a locking hinge.

Can be easily installed on the lathe’s carriage or any other location to protect the operator from metal chips projections.

P/N	SPIK-01	SPIK-02	SPIK-03
Screen width	400 (15.8”)	500 (19.7”)	600 (23.6”)
Screen height	300 (11.8”)	400 (15.8”)	500 (19.7”)
Special sizes available on request			

1.3 Model FER-SD – Multiple Sliding Screens

This lathe guard has 2 sliding screens by default, one as the chuck guard and the other one as the chip shield over the carriage. It can get up to 4 screens. LED lights built-in the shields are optional.

The chuck screen has an interlock switch mounted on the back frame to stop the machine when opened.

The kit is composed of a heavy-duty steel frame which is adjustable up/down and front/back. The A to G dimensions are required for ordering and we have a template to fill.

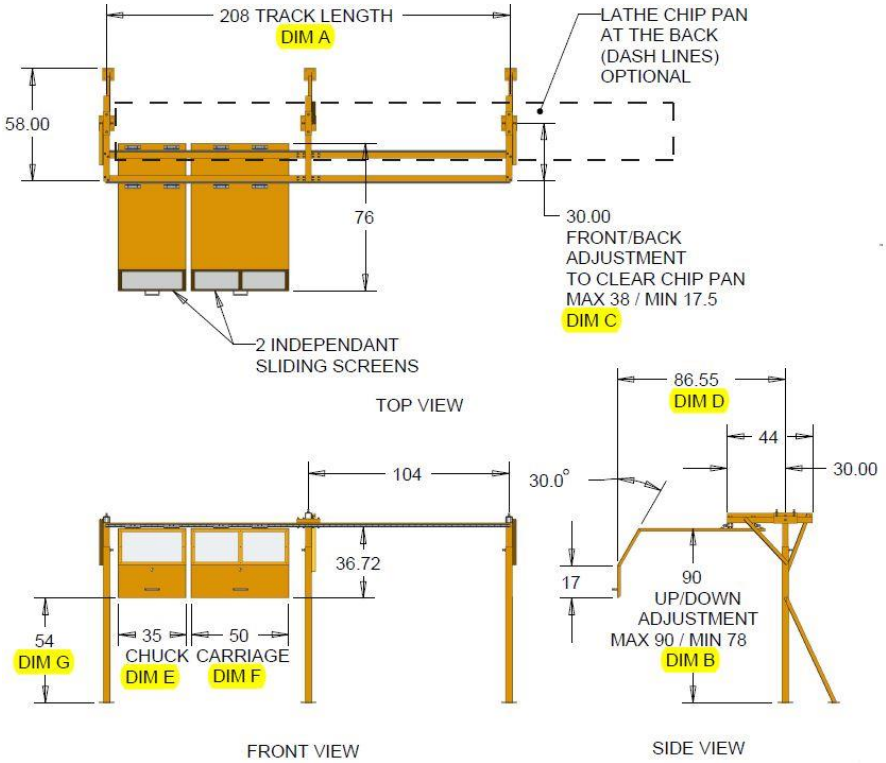

1.4 Model TGS & FER-LRV - Vertical Lathe Guards (VTL)

We have a special line of Vertical Turret Lathes (VTL) safety guards with our models **TGS-01** with 1 screen and the **TGS-02** with 2 screens. The **FER-LRV-1 & FER-LRV-2** are made custom to suite any machine configuration.

This VTL guard has the following features:

- Screen in polycarbonate shock-proof material 3mm thick. Slides up & down for easy chuck access and free space for cleaning
- Base feet for ground fixing
- Safety interlock switch included
- Lateral screens: polycarbonate windows, custom size
- Support for vertical sliding with double sleeves bearing
- Counterweight system with PVC coated steel cables

P/N	Standard screen height	Features
TGS-01	**500mm (19.69”)**	**Single sliding screen, based on chuck diameter**
TGS-02	**500 x 2= 1000mm (39.37”)**	**Dual sliding screens, based on chuck diameter**
FER-LRV-1	**610mm (24”)**	**Fully customizable design One Sliding Screen**
FER-LRV-2	**610 x 2=1220mm (48”)**	**Fully customizable design Two Sliding Screens**
Contact us for more details or to order		

1.5 Lathe Accessories

1.5.1 Model BSW – Back splash wall

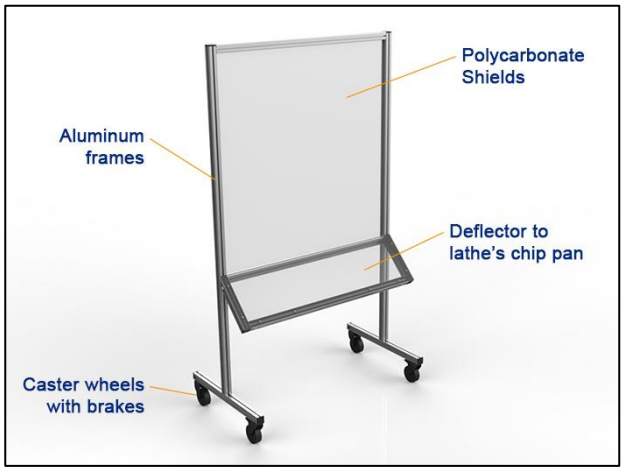

Easy to move for maintenance or clean-up, this mobile wall is designed for containing coolant spills back to the coolant pan of the lathe.

We can customize these mobile back splash walls to suit your applications.

Contact us for options and to get a quote!

1.5.2 Model FER-PED – Stop pedal for long lathe

Safety stop pedal for lathes or long machines. Comes with 2 built-in switches and spring-loaded mechanism. Can be mounted on the floor or on the sides of the lathe base. Specify the overall length when ordering.

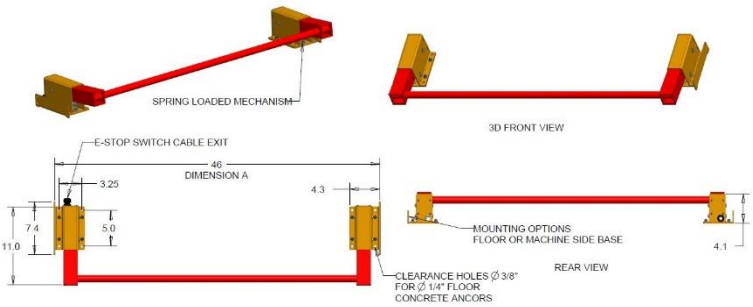

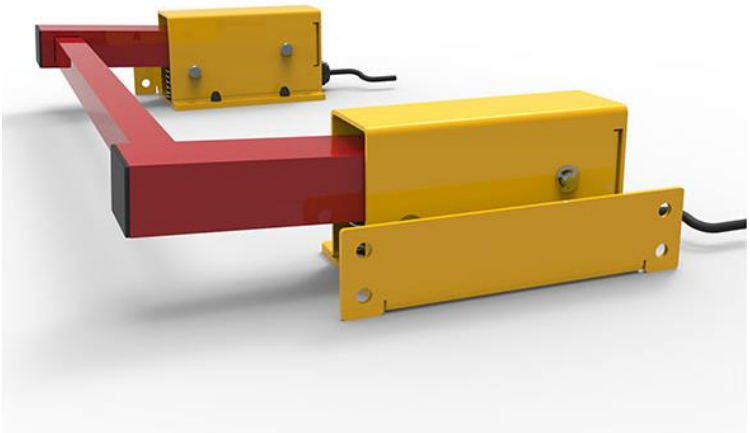

1.5.3 Model SPIDER – Belt Sanders for lathes

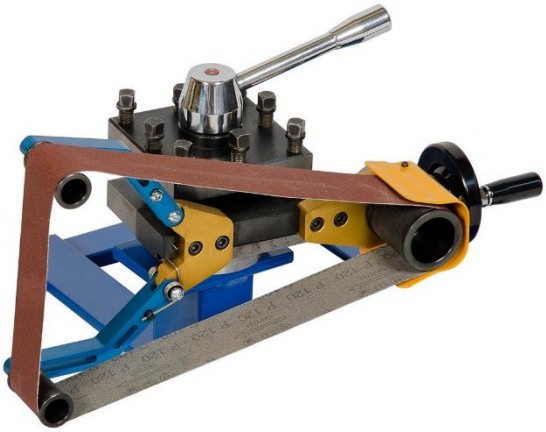

An interesting tool for sanding and finishing parts easily and safely on conventional lathes. Designed in accordance with ISO 23125 Standards 6.2.1: "***No use of hands during working operations***"

No more need to make by hand dangerous sanding operations with risk of serious accidents. Simple fitting of the tool on the lathe turret body. Easy sanding of bars of different diameters and shapes owing to the tool design and the tensions springs.

The sanding belt is rotated easily by means of knurled cylinders in order to guarantee the best working conditions. Available in two sizes and includes 3 sanding belts of 80, 120 & 220-grit.

The machinist choice!

P/N	Sanding belt Length	Sanding belt Width
SPIDER-50	900mm (35")	50mm (2")
SPIDER-75	1100mm (43")	75mm (3")
Includes 3 belts: 80, 120 & 220 grit		

Milling Machines Safety Guards

We have 4 different types of spindle guarding for conventional milling machines. The difference in each model is either the number of movements allowed or the adjustment capabilities. Every movement (axis or rotation) on the arm is interlocked. The switch is positive action type. See section **2.4** below for screen sizes & options.

2.0 Model FB – 2 axes of rotation

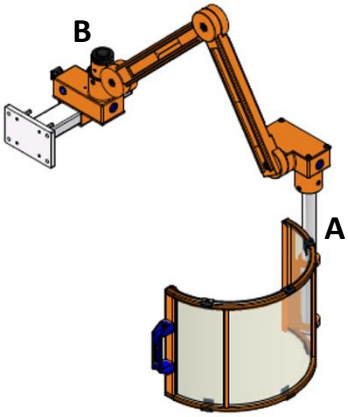

A: Shaft that holds rotating screen

B: Pivot point, the arm can be swung away to clear access to the table and spindle

2.1 Model FBB – 3 axes with lifting

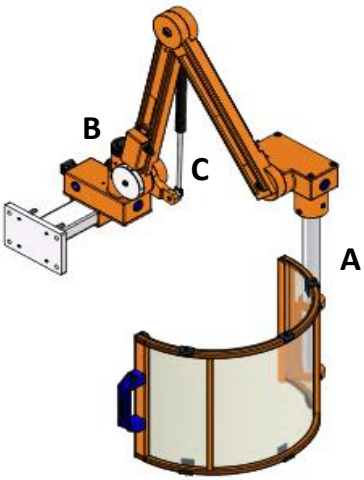

A: The shaft holds the rotating screen

B: Pivot point, the arm can be swung away to allow full access to the table and spindle

C: Gas strut to enable swing the screen up and down

2.2 Model FA – 2 axes, more adjustments

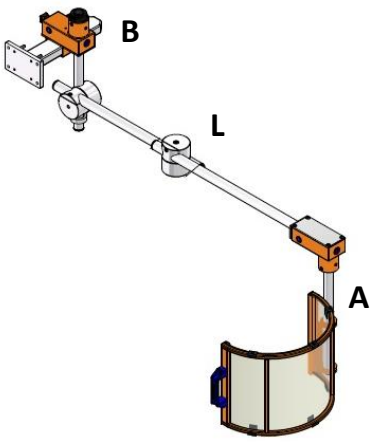

A: Shaft that holds rotating screen

B: Pivot point, the arm can be swung away to have full access to the table and spindle, adjustable in height

L: Adjustable in length and can rotate

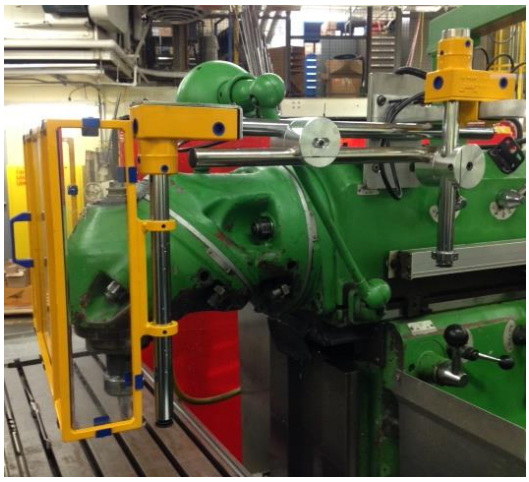

2.3 Model FAB – 3 axes with lifting

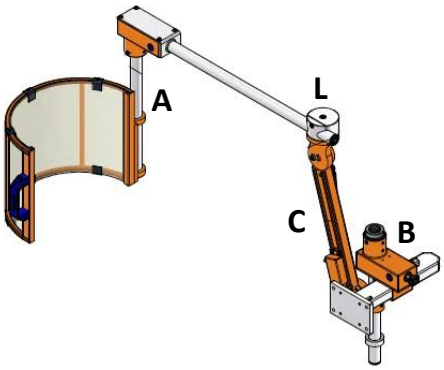

A: Shaft that holds rotating screen

B: Pivot point, the arm can be swung away to have full access to the table and spindle, adjustable in height

C: Gas strut to enable swing the screen up and down

L: Adjustable in length and can rotate

Ordering guide

As an example, for ordering a FBB arm type with a round screen 450mm diameter x 240mm wide (see next section for screens), the part number will be: **FBB-450H240**.

2.4 The screen sizes & options

There are two types of screens available for milling guards; the half-moon screen and the flat screen types. To size the screen, you need to calculate the width of the milling head near the spindle and add about 80mm (3”) to that measure. This will give you approximately the diameter of the screen (A), in many case you will have to round up to the nearest screen size in the following table.

A (dia)	B (width)
300mm (11 ¾”)	**180mm (7”) OR 240mm (9.5”)**
350mm (13 ¾”)	
400mm (15 ¾”)	
450mm (17 ¾”)	
500mm (19 ½”)	
550mm (21 ½”)	
600mm (23 ½”)	
650mm (25 ½”)	
700mm (27 ½”)	
750mm (29 ½”)	
800mm (31 ½”)	
**Special sizes and configurations on request*	

2.4.1 Half-round screen

These round screens are made of heavy-duty steel frame and strong polycarbonate shield.

The machinist choice!

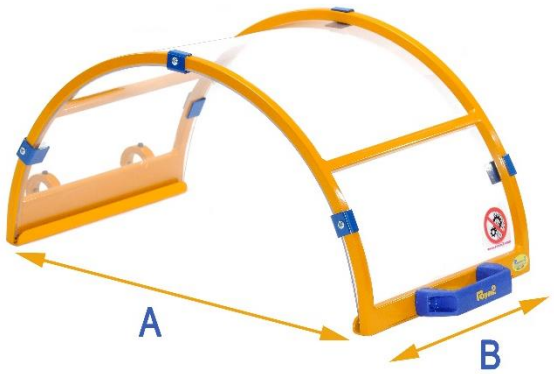

2.4.2 Flat screens

There are two options of flat screens;

- Model **600P** (as shown here)
- Model **600P-SPE** - without the side panels

The screen size is 600mm (23 $^{1/2}$”) by 400mm (15 $^{3/4}$”).
Special sizes available on request.

2.5 Model AL - Boring mill guard

Safety shield used for protecting the operator from the machining area. Slides vertically by means of a counterweight system moving on steel ball bearings.

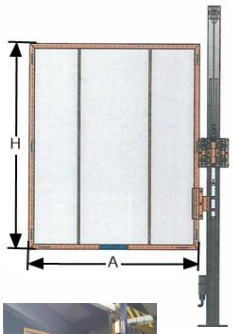

The safety interlock switch stops the machine when the guard is lifted. Vertical post height varies in accordance with screen dimensions, special size on request. Standard versions are in stock.

P/N	Height (H)	Width (A)	Post height
AL-1	900mm (35.5’’)	800mm (31.5”)	900mm (35.5”)
AL-2	1000mm (39.25”)	800mm (31.5”)	900mm (35.5”)
AL-3	1200mm (47.25”)	800m (31.5”)	900mm (35.5”)

2.6 Model FAO – Drawbar guard

The **FAO** guards are designed for drawbar safety for milling machines. Can be installed on any machine which requires an access to a rotating shaft for adjustment or tool setup.

Our most popular model is the **-CM**.

P/N	Interlock switch
FAO-S	NO
FAO-CM	YES

Drill Press and Radial Drill Guards

The models **TR** for drill guards are built to resist an industrial environment. The interlock switch is enclosed in a metal housing which serves as the mounting bracket.

- Adjustable arms, extended stroke as option
- Built-in interlock switch, positive action
- Mountings for small to large geared head drills
- Special arm assembly for radial drills, see below
- Easy to install
- May require a motor starter, see section **11.0**

3.0 Models TR-1 & TR-6 – Small drills

The **TR-1** and **TR-6** are mostly used on small drills. The guard is adjustable in height with a knob. The interlock switch is enclosed in a metal casting. The **TR-6** is the larger version of the **TR-1**.

These safety guards may also be used to safeguard band saws, directly in front of cutting area.

P/N	Diameter	Height
TR-1-CM	**120mm (4.75”)**	**200mm (7.75”)**
TR-6-CM	**170mm (6.5”)**	**200mm (7.75”)**
Replacement screens available		

3.1 Model TR-5

The **TR-5** is commonly use on drill presses with a large head. The guard is adjustable in height with a screw and will always stay in place. The interlock is enclosed in a metal casting.

P/N	Screen width	Screen height
TR-5-CM	230mm (9”)	310mm (12.25”)
Replacement screens available		

3.2 Model TR-2

Special mounting
Model TR-2-SP-CM

The machinist choice!

The **TR-2-CM** is our “Universal” drill guard. Simple to install and gives you plenty of possibilities for adjustment. Fits most of the standard drill presses.

Great for any drill with a belt driven speed change system and a head unit that is around 100mm (4") in width. The **TR-2-SP-CM** special version allows the screen and arm to be mounted closer to the machine.

P/N	Hex. rod length	Screen width	Screen height
TR-2-CM	500mm (19.68”)	200mm (7.87”)	130mm (5.12”)
TR-2-SP-CM	500mm (19.68”)	200mm (7.87”)	130mm (5.12”)
Replacement screens available			

3.3 Model TR-2-T

Health & Safety standards always improve, so we went ahead to design a full 360 degrees drill guard. The screen has an interlock hinge to prevent a machine start if not closed.

It has similar characteristics as the **TR-2** but also covers the back of the chuck.

P/N	Rod length	Screen width	Screen height
TR-2-T-CM	**500mm (19.68”)**	**232mm (9.13”)**	**130mm (5.12”)**
Replacement screens available			

3.4 Model TR-7 – Extended stroke

The **TR-7** is the same type of guard as the **TR-2** above, with a longer adjustable arm stroke. Great for drill presses with long spindles.

The rod is extended by about 7.5” compared to the model **TR-2**.

P/N	Rod length	Screen width	Screen height
TR-7-CM	**689mm (27.13”)**	**200mm (7.87”)**	**130mm (5.12”)**
Replacement screens available			

3.5 Model TR-3A – Geared head or large drills

The **TR-3A** is the same type of guard as the **TR-2** above, with a much larger screen. This guard works very well on drill presses that have very wide or geared head drill presses.

This guard can also be used on small radial drills.

P/N	Rod length	Screen width	Screen height
TR-3A-CM	**500mm (19.68”)**	**280mm (11”)**	**202mm (7.95”)**
Replacement screens available			

3.6 Model TR-9 – Lift-up screen

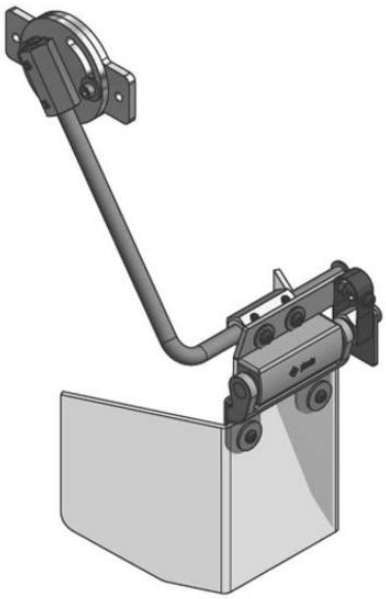

The **TR-9-CM** has a lift-up/down screen. Simple to install and gives you plenty of possibilities for adjustment. Fits most of the standard drill presses. Includes an interlock hinge switch.

Closed position

Opened position

P/N	Overall vertical length	Screen width	Screen height
TR-9-CM	**379mm (15”)**	**213mm (8.4”)**	**140mm (5.5”)**
Replacement screens available			

3.7 Model TR-3B – Radial drill guard

The **TR-3B** guards specially designed for large radial drills. They are heavy duty and feature safety switch with a choice of polycarbonate (**POL**) or laminated glass (**VT**) screens.

VT – laminated glass

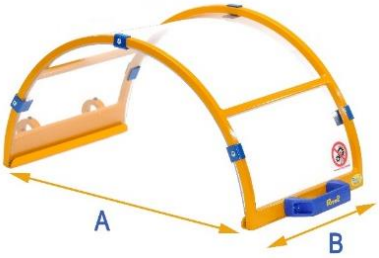

Available screen sizes (special sizes available on request)						
P/N	**VT or POL**					
	300	**350**	**400**	**450**	**500**	**600**
A (diameter)	**300 (11$^{3/4}$”)**	**350 (13$^{3/4}$”)**	**400 (15$^{3/4}$”)**	**450 (17$^{3/4}$”)**	**500 (19$^{1/2}$”)**	**600 (23$^{1/2}$”)**
Width	**Standard 180mm (7”)** / Option 240mm (9.5”)					

Grinder guards and shields

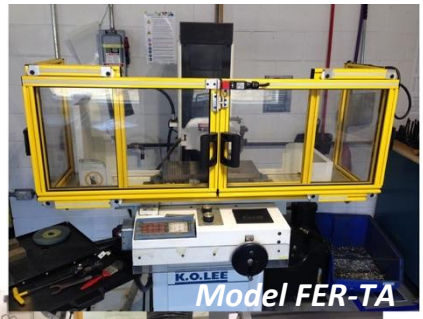

Model FER-TA

Model PR-2

Model MO-2 with interlock

Our grinder guards and shields are designed and built to last while resisting for heavy abrasion. We offer a wide range of shields for these grinding machines:

- **Bench grinders**; models **MO-1**, **MO-2** and **MO-3**, options with built-in interlock switch
- **Surface grinders** - with sliding doors and solenoid switch with latching action; model **FER-TA**
- **Cylindrical (OD) grinders**; model **PR-1** with 1 sliding door and model **PR-2** with 2 doors, tracks included
- **Custom made machines**; designed to suite your applications, contact us for a quote!
- **Screen Options**: high impact resistance polycarbonate screens or laminated glass (with LED lights available)

Bench and pedestal grinders

4.0 Models MO-1 & MO-2 – Single Screen

Designed for mounting on bench and pedestal grinders, the shield options are shown in the table below (single screen):

P/N	Screen (width x height)	Features
MO-1	140x150mm (5.5”x6”)	Polycarbonate small screen
MO-2-POL	140x180mm (5.5”x7”)	Polycarbonate large screen
MO-2-VT	200x240mm (8”x9.5”)	Laminated glass
MO-2-L-VT	200x240mm (8”x9.5”)	Laminated glass with LED lights

4.1 Model MO-2-L-VT-CM – with glass & interlock, double screens

This model has a positive action interlocked safety switch built-in a housing for bench grinders.

Adjustable mounting arm is provided for easy mounting behind the grinder.

The machinist choice!

Shields are equipped with clear laminated safety glass and bright LED work lights. 200x240mm (8”x9.5”) screen size. A motor starter may be required, see section **11.0**

Surface Grinder Guards

4.2 Model FER-TA – table mount with sliding doors

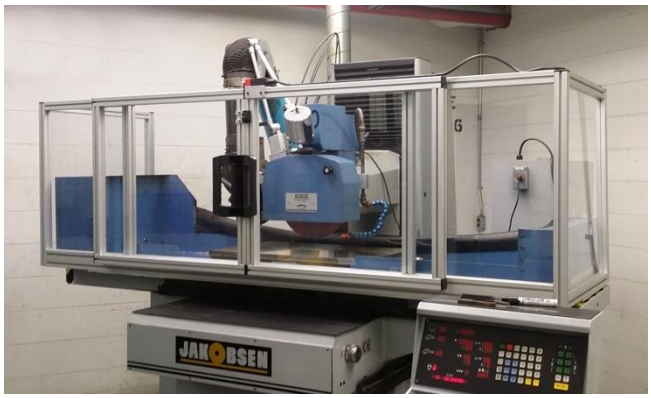

The table guard **FER-TA** has polycarbonate windows and interlocked sliding or hinge doors. Made of aluminum framing and easy to customize. To build this guard, we need 3 measurements: **A, B & C**. We will provide the widest door opening. Comes with mounting hardware to ease the installation.

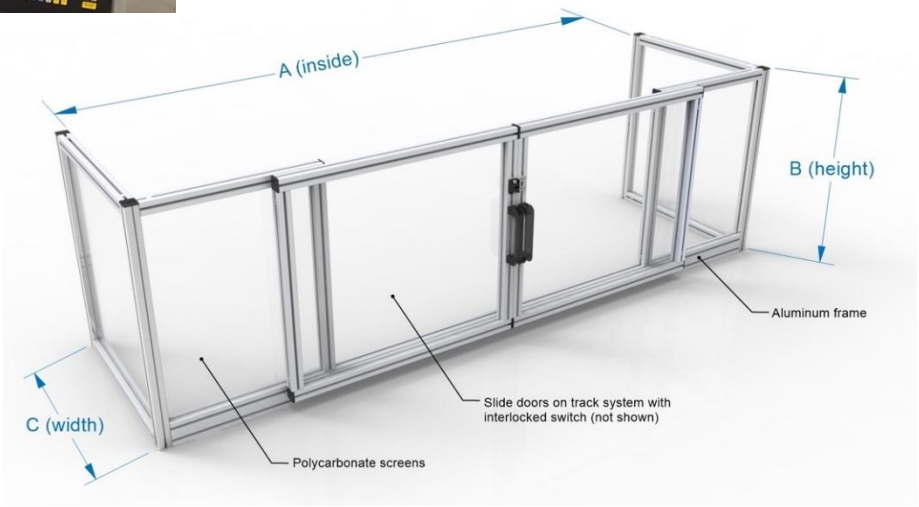

Cylindrical OD Grinder Guards

4.3 Model PR-1 - Single door system

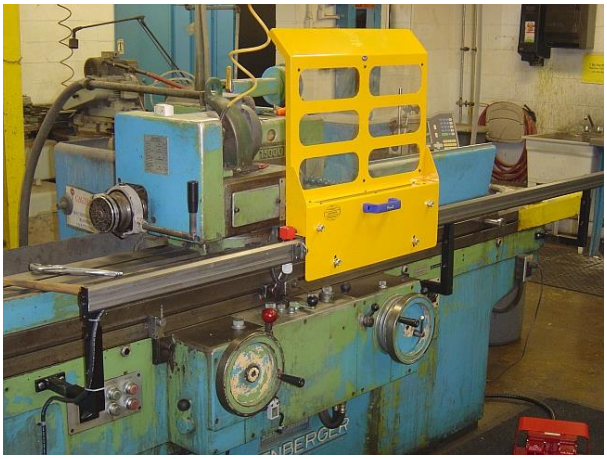

Universal OD grinder guard made of steel with a single shockproof transparent screen. Comes complete with a solenoid latching interlock switch. Installed on the front of the machine, directly in front of the operator. The guard moves on a rail/roller system and can be moved out of the way for machine setup. Rail comes in a variety of sizes.

Door width is 600mm (23.63”) by 665mm (26.18”) height.

Available models (special sizes on request)					
P/N	PR-1-1200	PR-1-1500	PR-1-2000	PR-1-3000	PR-1-4000
Track length	1200mm (47.25”)	1500mm (59”)	2000mm (78.75”)	3000mm (118”)	4000mm (157.5”)

4.4 Model PR-2 – Dual doors system

The **PR-2** guard is the same as the **PR-1** above but with 2 screens.

Screens latch together to stop relative movement.

Each door has a width of 600mm (23.63”) by 665mm (26.18”) height.

Available models (special sizes on request)				
P/N	PR-2-2000	PR-2-3000	PR-2-4000	PR-2-5000
Track length	2000mm (78.75”)	3000mm (118”)	4000mm (157.5”)	5000mm (196.75”)

Belt and Disc Sander Guards

5.0 Model FER-DS – For disc sanders

Our disc sander guard is adjustable in height. The purpose of the guard is to cover the area of the disc sander which is not used by the operator. The guard slides up and down easily and stays in place. It's designed for optimal safety while at the same time allowing for quick fined tuned adjustment.

Made of heavy steel gauge and aluminum posts. Universal for both right or left wheel rotations. Comes pre-assembled with mounting hardware.

Available models (special sizes on request)								
P/N	FER-DS-6	FER-DS-8	FER-DS-9	FER-DS-12	FER-DS-16	FER-DS-20	FER-DS-24	FER-DS-30
Disc diameter	6''	8''	9''	12''	16''	20''	24''	30''

5.1 Model FER-BS – For belt sanders

The belt sander guard is adjustable in height. Slides up and down easily and remains in place. Made of heavy steel gauge and aluminum post. Universal for both right or left mounting. Comes pre-assembled with mounting hardware.

Available models (special sizes on request)			
P/N	FER-BS-2	FER-BS-4	FER-BS-6
Belt width	2''	4''	6''

Lower belt guard **FER-BS-6L** is also available for 6" belt sanders.

Band Saw Guards

6.0 Model PS-1 - Horizontal band saw

The **PS-1** guard for horizontal band saws consist of a pair of clear screens mounted on rotating posts positioned on each side of the machine. Comes with built-in interlock switches.

Our standard size is 600mm (23.6”) wide x 400mm (15.75”) height. The post height is 1120mm (44”). The screens can be custom made for your needs.

Clear PVC strips allows the bars to be fed through the sawing area.

6.1 Models TR-1 & TR-6 - Vertical band saw

The metal blade guard is usually not safe enough for the operators, so here’s the **TR-1** or **TR-6** to improve safety. The screen is mounted to an interlock arm assembly and can be lifted to fit the thickness of the workpiece.

P/N	Diameter	Height
TR-1-CM	120mm (4.75”)	200mm (7.75”)
TR-6-CM	170mm (6.5”)	200mm (7.75”)
Replacement screens available		

Ironworker P50 & P90 Safety Guards

7.0 Models IR-P50 & IR-P90 - Piranha ironworkers

Piranha guard can be sold has a complete kit or separately. The guard has been developed for a P50 and P90 machines.

- Easy Installation
- Heavy duty steel construction
- Precision cut guide slots

The Piranha guard is built using the actual bolting pattern on the machine. The guard can be easily installed without any holes to drill and all fasteners are included.

*Model IR-P50 shown

Note: Developed for P50 & 90. It may restrain some operations or make them impossible. Using this guard on a different ironworker may not be possible.

Hydraulic and Break Press Guarding

8.0 Model FER-HYD – For H-Frame insertion presses

100T Press with cage all around and an interlocked balanced gate door

The guard is made of aluminum extrusions with PVC coated steel mesh and polycarbonate windows stacked together. A dual pressure valves system is optional. The front can be designed with different systems:

- Gate door with counter-weights (as shown on the left) or doors on hinges (right picture)
- Pneumatic lifting door
- Full cage all around is available, built to custom features and sizes
- Contact us for a quote!

8.1 Model FER-DSP – Break press laser system

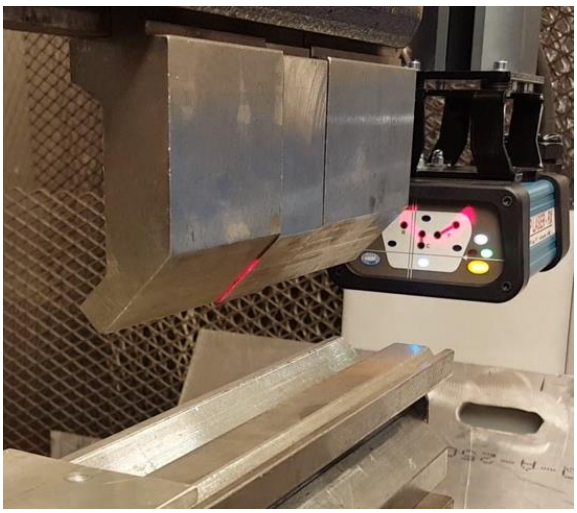

We have an exclusive DSP Laser system for break presses. This system can improve safety while using the ram at full speed.

There's a selectable switch to perform either a regular bend, a bend with sides or a full box operation.

Contact us for details!

Punch Press Guarding

9.0 Model PP – Punch Press

Safeguard for punch press with metal frame and shockproof grade. The front side can be opened. At both sides sliding steel rods allow work pieces of different dimensions. Provided with magnetic interlock switch. Sizes on request.

Presence Sensing Devices (PSD)

Light Curtains, Scanners & Safety Mats

10.0 Light Curtains Systems

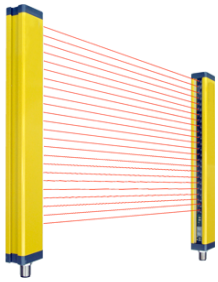

- Height: up to 1800mm, with mirrors for perimeter guarding
- Resolutions: finger, hand or body detection
- Floating blanking as option, for break presses
- Spring bases for accidental hit by a lift truck

10.1 Safety Mats – Pressure sensitive flooring

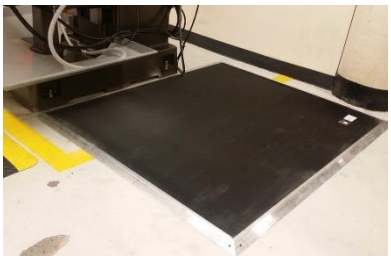

Pressure-sensitive safeguarding products are designed to detect the presence of people on the sensing surfaces. These mats have two conductive hardened steel plates that are held apart by non-conductive compressible separators.

Anti-Restart and Electrical Components

11.0 Anti-Restart Devices - Motor controls

Full size Anti-Restart Panel with disconnect

A motor starter (Anti-Restart) prevents restarts of the machine after an interlocked guard is closed back into position.

A Start button must be pressed for the motor starter to engage and start the machine and its motor. It features:

Small Anti-Restart Box with 3 buttons

- Contactor/relay, up to 25 amps
- Thermal overload protection, as option to order
- Start/stop and twist release emergency button (E-Stop)
- Yellow background for E-Stop button in French, English or bilingual
- ***Small Starter Box***: double insulated heavy-duty plastic enclosure model available for small machines (drill presses, grinders, etc.). Very compact form factor!
- UL and CSA approved
- Schematic diagrams included
- ***Option***: motor braking with VFD Drive unit
- All assembled in house

These Anti-Restart protections are also available with disconnect switch and a reverse/forward switch if needed. Contact us for details on how to order!

LED Work Lamps for machines

12.0 Model IR-LED-COB – Adjustable arm work light

IR-LED-COB-L

Our exclusive powerful LED work lamps for machine is assembled in Italy. There are 3 different arm sizes to choose from. It has the following features:

- 20W – 2600 Lumens
- Up to 85% energy saving
- Low performing heat
- Zero maintenance
- Adjustable extruded aluminium head with high resistance glass
- Easily adjustable arm
- Resistant to coolants and lubricants
- IP65 rated
- 6.000°K - 40.000h
- RoHS RAEE CONFORMITY
- Standard: 120V, optional 24V
- Bolt-on the machine base

P/N	Arm Length
IR-LED-COB-S	**Small arm**
IR-LED-COB-M	**Medium arm**
IR-LED-COB-L	**Long arm**

**Not for sale in Ontario, Canada*

Ask for our exclusive LED work lights catalog, you will discover a wide range of powerful LEDs for your needs!

IR-LED-COB-S

IR-LED-COB-M

AMERICAN ENGINEERING
An EFI Company

American Engineering

- *Phone*: **(909) 225-2721**
- *Email*: **akhan@americanengg.com**
- *Web*: **www.americanengg.com**

6311 Rutland Ave. Unit A

Riverside, CA 92503

*Version : 2026_v1